90000014
rev. 000
06/2014

CE

COBRA

EN

INSTRUCTIONS FOR USE

CONTENTS

1. GENERAL WARNINGS 4
1.1. SYMBOLS 4
1.2. INTENDED USE AND INSTRUCTIONS FOR USE 4
1.2.1. CLASSIFICATION 5
1.2.2. ENVIRONMENT CONDITIONS 5
1.2.3. REFERENCE STANDARDS 6
1.2.4. WARRANTY 6
1.3. SAFETY PRECAUTIONS 8
1.4. END-OF-LIFE DISPOSAL INFORMATION 9
2. SYSTEM COMPONENTS 10
2.1 NAMEPLATE 11
3. ROUTINE MAINTENANCE 11
4. INSTRUCTIONS FOR USE 11
5. TECHNICAL SPECIFICATIONS 13
6. GUIDANCE AND MANUFACTURER'S DECLARATION 14
6.1 ELECTROMAGNETIC EMISSION 14
6.2 ELECTROMAGNETIC IMMUNITY. 15

INSTALLATION

B1. INSTALLATION AND COMMISSIONING 13
B1.1 INSTALLATION OF COBRA SINGLE COMPUTER WITH FIREWIRE IEEE1394A TYPE (6-PIN) OR IEEE1394B (9-PIN) 13
B1.2 INSTALLATION OF COBRA SINGLE IMAC WITH THUNDERBOLT PORT TYPE 13
B1.3 INSTALLING THE COBRA ALONG WITH ANOTHER INSTRUMENT 14

1. GENERAL WARNINGS

- **These instructions describe the correct use of the system/instrument CSO Fundus Camera Cobra.**

ATTENTION!
Please read this manual carefully before using the equipment

All CSO products are manufactured with maximum attention to reliability and safety. In order to use it efficiently and in complete safety we recommend reading this manual carefully before installation and use and heeding all the safety warnings contained in herein and reported on the exterior of the equipment. Even operators who have already used this type of instrument should verify their knowledge of the instructions contained in this manual. Keep this manual near the instrument for handy reference during use.

This device is considered a medical device. It should be utilized by authorized personnel only.

1.1. SYMBOLS

Explanation of the graphic symbols used:

1) Applied parts classified as Type B in accordance with EN 60601-1 standard.
2) Device of class II (according to EN 60601-1). It means that the insulation to the power supply is highly trustworthy and there is therefore no need for earthing to guarantee security
3) General warning of the duty to read the instruction manual carefully before installing and using the equipment.
4) “CE marking” that attests to product compliance with European Union Directive 93/42/EEC (“Medical Devices”) and following amendments.
5) Indicates the obligation to collect and separate disposal of electrical and electronic equipment, at the end of their useful life, according to 2002/95/EC, 2002/96/EC and 2003/108/EC
6) Manufacturer

1

2

3

4

5

6

1.2. INTENDED USE AND INSTRUCTIONS FOR USE

Cobra is an electromedical system that allows for digitally retrieving, acquiring and processing of a retinal image, for use in ophthalmological diagnosis by medical specialists, and other uses inherent to the professional activity of other operators, optometrists and opticians, to the extent permitted by the laws and regulations for the exercise of their profession.

An absolute new entry in the field for retinal imaging, the instrument allows for a direct, ‘live’ monitoring on the computer screen, and capturing also in cases where the pupil diameter is extremely narrow. The instrument, with manual acquisition and electronically guided control guarantees high precision and repeatability of the measurements.

The Phoenix software has the following characteristics:

- Manual guided acquisition system;
- Simultaneous visible (‘white’) light and IR acquisition;
- Panoramic analysis for enlarged field of view;
- Image processing, drawing and measuring
- Zoom effects

- Cup/disc horizontal and vertical;
- Image overlay;
- Edge enhancement;
- Contrast, brightness and RGB components settings and gamma correction;
- Image color splitting (grey-values, red free, channel separation);
- Color inversion and filter simulation;

For more detailed information on Phoenix software, we refer to the User manual.

1.2.1. CLASSIFICATION

- Classification MEDICAL DEVICES
  Classification of the device according to rules as of appendix IX of Directive 93/42/EC and following amendments: class I

- Classification ELECTROMEDICAL DEVICES
  Class of protection against direct and indirect contact: class II
  Applied parts: Type B
  Compliance level for protection against humidity: Common devices (shell not protected) IP20
  Method of sterilization or disinfection: Disinfectable devices
  Compliance level for protection in the presence of inflammable anesthetics: No protection
  Degree of electrical connection between the unit and patient equipment with Patient Applied Part
  COBRA cameras fall into the category of class II, so the earth connection and the plug earth are functional earthing.

1.2.2. ENVIRONMENT CONDITIONS

As long as the system components remain in their original packing the equipment may be exposed to the environmental conditions listed below, for a maximum of 15 weeks during shipping and warehousing, without suffering damage.

Environment conditions for operation:
Temperature between -10 °C and +35 °C
atmospheric pressure between 800 hPa and 1060 hPa
relative humidity between 30% and 90%.

Environment conditions for warehousing:
Temperature between -10 °C and +55 °C
atmospheric pressure between 700 hPa and 1060 hPa
relative humidity between 10% and 95%.

Environment conditions for shipping:
Temperature between -40 °C and +70 °C
atmospheric pressure between 500 hPa and 1060 hPa
relative humidity between 10% and 95%.

Vibration, sinusoid 10 Hz @ 500 Hz, 0.5g
Shock 30g, duration 6ms
Bumb 10g. duration 6ms

1.2.3. REFERENCE STANDARDS

The following reference standards were applied in design, production, and testing of the product:

EU Directives

- DIRECTIVE 93/42/EEC “MEDICAL DEVICES ” of 14 JUNE 1993, amended by 07/47/EEC.
- DIRECTIVE 2002/96/EC “Waste Electrical and Electronic Equipment (WEEE).”

Standards concerning Quality Management Systems

- UNI EN ISO 9001:2008 “Quality Management Systems – Requirements.”
- UNI EN ISO 13485:2012 “Medical Devices – Quality Management Systems - Clinical Requirements for Regulatory Compliance.”

Technical Standards

- EN 60601-1 - “MEDICAL ELECTRICAL EQUIPMENT – PART 1: GENERAL REQUIREMENTS FOR SAFETY." 2006 edition as amended.
- EN 60601-1-2 - “Medical Electrical Equipment – Collateral Standard: Electromagnetic Compatibility.” 2001 edition.
- UNI EN ISO 15004-1 “Ophthalmologic Instruments – Fundamental Requirements and Test Methods – Part 1: General requirements applicable to all ophthalmic instruments.” 2007 edition
- UNI EN ISO 15004-2 “Ophthalmologic Instruments – Fundamental Requirements and Test Methods – Part 2: Light hazard protection” 2007 edition
- UNI EN ISO 14971:2012 “Risk Management for Medical Devices.”
- Guidance for Industry and FDA Staff - Guidance for the submission of Premarket Notifications for Medical Image Management Devices (July 27, 2000)
- Guidance for Industry and FDA Staff - Guidance for the content of premarket submissions for software contained in medical devices (May 11, 2005)

1.2.4. WARRANTY

CSO S.r.l. is responsible for compliance with Directive 93/42/EEC as amended by 2007/47/EC, its performance, safety and reliability, and the CE marking.

Nevertheless CSO S.r.l. denies such responsibility when:

- the installation and commissioning are not made in accordance with the instructions and precautions given in this manual;
- the device is not used in accordance with the instructions and precautions in this manual;
- spare parts and accessories not supplied or recommended by CSO S.r.l. are used;
- repairs and safety checks are not carried out by competent personnel, qualified, trained and autho rized by CSO S.r.l.;
- the electrical installation of the room in which the appliance is not in compliance with CEI and laws and regulations.

CSO S.r.l. disclaims any liability for direct or indirect consequences or damages to persons or property, resulting from improper use or incorrect clinical evaluation of its use.

CSO srl guarantees this product for a period of 24 months from date of invoice. This warranty includes replacement, at CSO or an authorized service center, of components and materials as well as relative labor. Shipping costs will be at the customer's expense.

Parts subject to wear and/or deterioration in normal and parts damaged by improper use or maintenance performed by persons not authorized by CSO are not covered by this warranty.

CONDITIONS NOT INCLUDED UNDER WARRANTY

- repair of damages caused by natural catastrophes, mechanical shock (dropping, crushing, etc.), defects in the user's electrical system, negligence, improper use, and/or maintenance/repairs per formed using non-original materials and/or by persons not authorized by **CSO srl**.
- any type of improper use or use not specifically intended by the manufacturer.

CSO srl declines responsibility for any interruption or inefficiency in service due to causes or circumstances beyond its control. The customer shall in no case have any right to compensation for damages suffered as a consequence of the unavailability of the equipment.

To request technical assistance with maintenance, contact a technical assistance center or directly contact:

CSO srl
Costruzione Strumenti Oftalmici
Via degli Stagnacci, 12/E
50010 Badia a Settimo
Scandicci (FI) - ITALY
Phone: +39-055-722191 - FAX +39-055-721557
Email: cso@csoitalia.it
www.csoitalia.it

1.3. SAFETY PRECAUTIONS

ATTENTION!

- When the capturing software starts, a quick check-up of the camera card is performed in order to check for possible hardware malfunctions. The hardware check is aimed at verifying the correct communication with the camera sensor. When the sensor cannot be reached, the operator is advised and cannot perform the acquisition until having contacted the Technical Assistance.
- Never touch the power cord with wet hands. Check frequently that the cord is so placed as not to be stepped on or crushed by weights. Never knot the cord.
- A damaged power cord can cause fires or electrical shocks. Check frequently that it is in good condition. If it becomes necessary to replace the power cord originally supplied with the instrument, contact your supplier.
- Do not perform any repairs or maintenance work on the instrument or the electrical system beyond what is explained in this manual.
- Do not use the instrument near water and be careful not to spill liquids on any part of it. Avoid damp and dusty locations and locations subject to brusque changes in temperature and humidity.
- Disconnect the instrument from the main power supply before cleaning and/or disinfecting.
- The equipment neither generates nor receives electromagnetic interference when used in proximity to other devices; no preventive or corrective measures need therefore be taken in this regard.
- No precautions are required in case of change in the device's performance
- In the standard configuration supplied by CSO, the system includes components that do not classify as medical electrical equipment (PC or portable computer, etc.) besides the fundus camera as such. The resulting system is in any case tested in accordance with EN 60601-1 (3rd edition), in particular according to the requirements described in chapter 16. Since the unit in question can include other instruments, medical electrical and not, CSO is unable to test compliance of all possible configurations.
- The configuration verified by CSO is the one with the PC outside of the patient area.
- Any other accessories (printer, scanner, etc.) connected to the analog or digital interfaces of the system must be certified in accordance with the standards listed below.
  - EN 60950 for ITE equipment (safety regulations for information technology equipment), or
  - EN 60601-1 for medical electrical devices.

  The connected accessories should be placed outside of the patient area.
- The operator should make sure, once all the equipment has been assembled, that the resulting medical electrical system complies with the prescriptions of EN 60601-1 (exact prescriptions are given in chapter 16 of the aforementioned standard)
- Should the measured leakage current values be outside of permissible limits, further safety measures as

THE PERSONAL COMPUTER AND ALL PERIPHERAL DEVICES SHOULD BE PLACED OUTSIDE THE PATIENT AREA

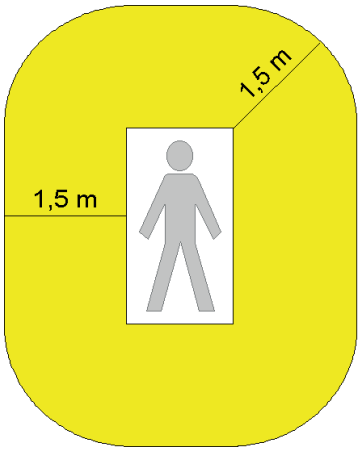

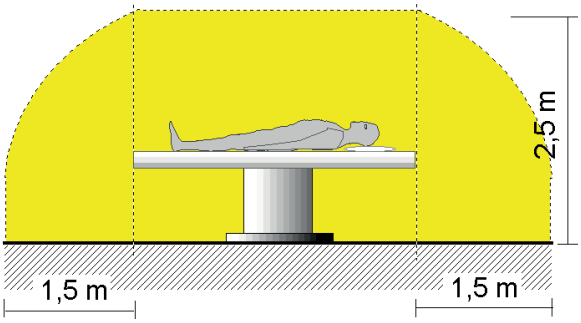

The patient area is the volume defined as shown in the figure, within which the patient may come into contact (intentionally or unintentionally, directly or through contact with the operators) with medical electrical and other devices making up the system

suggested by EN 60601-1 (3rd edition) should be adopted. In this case the entire system should be powered through an appropriate separate transformer or an insulating transformer.
- The transformer is absolutely indispensable when it is difficult to keep the computer and other non-medical electrical devices outside of the patient area.

ATTENTION!
Only those units bearing the CSO trademark and the external power supply (AC/DC Adapter MEAN WELL Mod. MES3OB-3P1J) of the "CONTROL BOX" may be placed and used inside the patient area.

The following parts of the system must be placed outside the patient area:

- Computer (PC or portable), with relative accessories (monitor, keyboards, mouse, etc.),
- Printers,
- Other auxiliary units that do not classify as medical electrical equipment (power supplies / battery chargers, modems, etc.).

If the system needs to be connected to a network (LAN / WAN) it is suggested to take whatever precautions necessary to avoid the importing of hazardous voltages coming from remote devices, by means of the connected cables. It might be necessary to use data transmission devices that ensure 'GALVANIC ISOLATION'.
CSO Srl disclaims all liability for the safety of the patient and the operator for electrical connections between computers and other external devices (peripherals) or LANs, not provided by CSO Srl.

1.4. END-OF-LIFE DISPOSAL INFORMATION

In accordance with Art. 13 of Leg. Decree No. 151 of 25 July 2005 implementing Directives 2002/95/EC, 2002/96/EC, and 2003/108/EC concerning reduction of use of dangerous substances in electrical and electronic equipment and disposal of electrical and electronic waste.
The instrument you have purchased is made using particular materials and substances. It may also contain substances having potentially dangerous effects on the environment and human health if released into the environment by improper disposal.
To avoid releasing dangerous substances into the environment and in order to promote conservation of natural resources, and should the user decide to dispose of an end-of-life instrument, the manufacturer will facilitate re-use and recovery and recycling of the materials it contains.
Government agencies have adopted measures obliging users, distributors, and manufacturers to contribute to collection of waste electrical and electronic equipment (WEEE) and prescribes that such equipment find re-use or be recovered or recycled.
When disposing of the instrument, remember that disposal is regulated by precise European and national laws and regulations that prescribe the following:

- **Do not dispose of the instrument as ordinary municipal waste**. For **separate collection** contact a company specialized in disposal of waste electrical and electronic equipment or your local waste disposal agency for information.
- If a new instrument is purchased from the same manufacturer to replace an end-of-life instrument puton the market before 13 August 2005, of an equivalent type and performing the same functions as the ew device, the distributor or manufacturer is required by law to take back the end-of-life device.
- If the user intends to dispose of a used device put on the market after 13 August 2005, the distributor or manufacturer is required by law to take back the device.
- The manufacturer is responsible for transporting, treating, and recovering and/or recycling any used equipment collected and for all relevant expenses.
- **Do not forget that dangerous substances present in waste electrical and electronic equipment and/or improper use of same or parts of same can have potentially adverse effects on the environment and human health.** The instrument described in this manual contains metal and plastic mechanical parts, electrical components, and electronic circuit cards. The manufacturer is at user's complete disposition for any information requested regarding the dangerous substances contained in the instrument and recovery and recycling procedures and/or the possibility of re-using the end-of-life instrument.

Current legislation provides severe sanctions in the case of failure to respect disposal laws and regulations in force.

2. SYSTEM COMPONENTS

The principal units making up the system are the:

Fundus unit, designed and built by CSO, composed of:

1. Fundus Camera
2. Personal Computer with Firewire port
3. Phoenix software

Standard accessories

The system is supplied complete with the accessories listed below:

- two guards for the advancement guides
- one dust cover
- one set Allen wrenches
- one pack chin rest papers
- two fuses
- Chinrest with illuminated fixation point and USB attachment

Optional accessories

- 230V / 230V isolation transformer (leakage current limiter for operating room use.
- Motor-driven telescopic-column adjustable-height, SCHUMO AG,
  Model TES2 23 / TA0113 X20 400238Z;

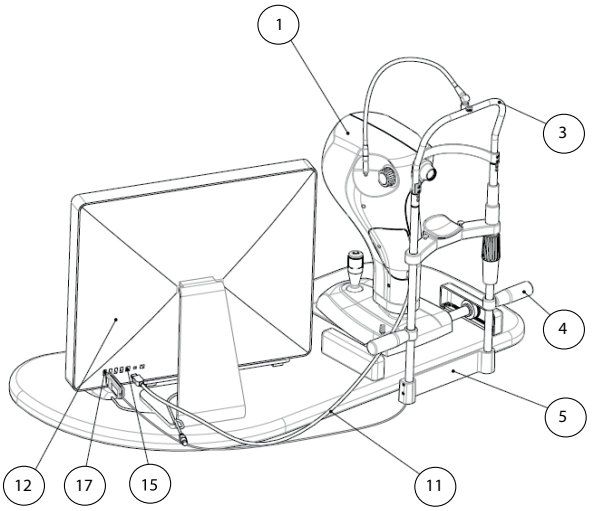

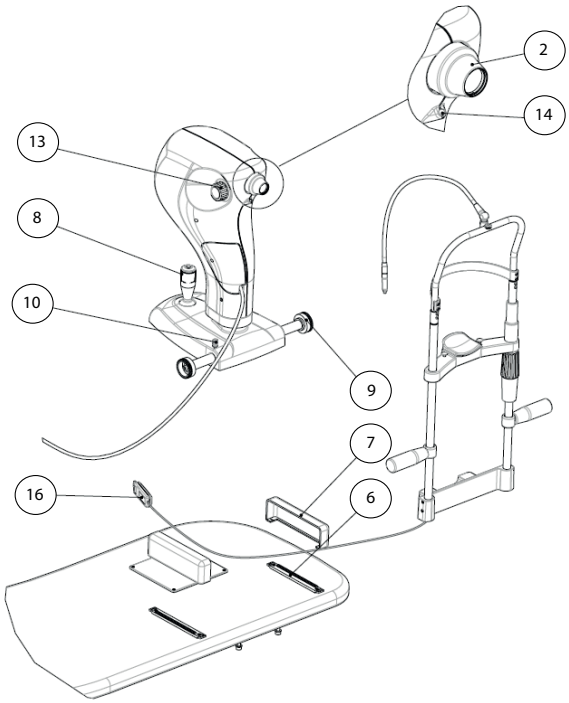

1) Instrument
2) Optical lens
3) Chin rest
4) Chin rest hand held
5) Chin rest support
6) Toothed guides Unit control box
7) Guide guards
8) Joystick with acquisition button
9) Toothed wheels
10) Base slide lock knob
11) Firewire cable
12) Personal computer
13) Focus adjustment handle
14) LED illumination
15) Firewire Socket
16) Fixation point power supply (USB)
17) USB socket

2.1 NAMEPLATE

Data on the plate :
- Name of the manufacturer.
- Name of the equipment.
- Serial number.
- Month and year of manufacture

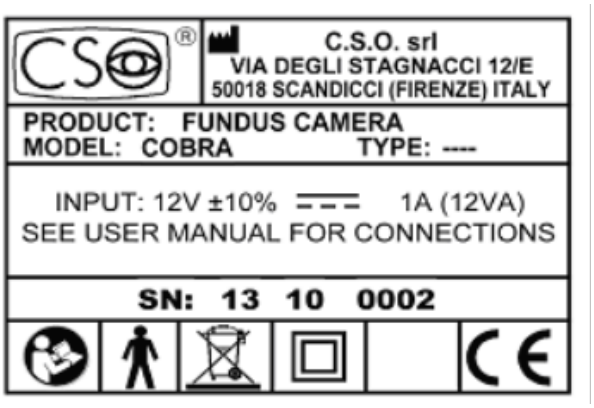

CAUTION:

Federal law restricts this device to sale by or on the order of A PHYSICIAN 21CFR 801.109

3. ROUTINE MAINTENANCE

The system requires no particular routine maintenance.

Clean the external surfaces of the instrument with a cloth slightly dampened with water. Do not use thinners or solvents.

Protection from Dust

When the instrument is not in use, protect it from dust by replacing it in the carrying case. Periodically remove any dust that has accumulated on the instrument with a very soft cloth or a hand-operated pump.

Unscheduled maintenance (repairs, replacement of components, checking internal parts, etc.) is the exclusive competence of the CSO technical assistance service

Attention

On request, the manufacturer will supply diagrams, components lists, and particular technical instructions for maintenance and calibration use by authorized and previously-trained personnel

ATTENTION!
Do not use solvents or thinners

ATTENTION!
In case of need for maintenance, contact the technical service authorized by CSO srl

4. INSTRUCTIONS FOR USE

a) Enter the program Phoenix; first instructions for Phoenix are the following:
b) After inserting the patient or the necessary new exam, the software will prepare for acquisition;
c) Make the patient sit comfortably with chin on the chin rest and forehead against the relative support;
d) Raise or lower the chin rest using the wheel available on the chin rest support, in order to center the pa tient's eye on the output channel (computer monitor);
e) Move the focus knob in the default position.
f) Move the unit so that this is in a position of about 5 cm from the eye
g) Tell the patient to fixate the fixation target;
h) Slowly advance the instrument towards the eye, using the monitor for maintaining alignment and focus, until the retinal image appears;
i) Make micro-adjustments with the joystick to maximize image quality in terms of homogeneity and illumina tion and field of view;
j) Optionally adjust focus with the focus adjustment handle;
k) It is possible to acquire more than one image per exam;
l) The images will be shown immediately afterwards on the main gallery.

The examination at this point is to be considered complete.
For more detailed information on Phoenix software, we refer to the User manual

ATTENTION!
Do not turn of the PC, nor disconnect the connection cable between PC and instrument while the instrument is used

ATTENTION!
To turn of the system it is sufficient to follow standard procedures for exiting a software program and turn of the power supply for the PC

TO ISOLATE (and obtain a condition of absolute safety) YOU SHOULD UNPLUG THE COMPUTER'S POWER CORD

5. TECHNICAL SPECIFICATIONS

	5MP
Working distance (mm)	20
Image resolution	2448 X 2051
Power Supply (instrument)	Firewire
Power Supply PC	See Computer data plate
Weight (kg)	ca. 10
Dimensions (mm) (H x L x D)	300 x 400 x 410
Shelf size (mm)	380 x 500
Classification according to safety standard EN60601-1 (3rd ed.)	
Class of protection against direct and indirect contact	Class II
Applied Parts	Type B
Compliance level for protection against humidity	Common devices (shell not protected) IP20
Method of sterilization or disinfection	Disinfectable devices
Compliance level for protection in the presence of inflammable anesthetics	No protection
Use conditions	Continuous service
Classification according to standard ISO 10940	
Center of the field	≥ 60 line pairs/ mm
Midfield (r/2)	≥ 40 line pairs/ mm
Periphery of the field (r)	≥ 25 line pairs/ mm
Pixel pitch	6 µm
Field of view	50 ˚ x 42˚

6. GUIDANCE AND MANUFACTURER'S DECLARATION

6.1 ELECTROMAGNETIC EMISSION

Table 1-Guidance and manufacturer's declaration – electromagnetic emission		
The equipment COBRA is intended for use in the electromagnetic environment specified below. The customer or the end user of the COBRA should assure that it is used in such an environment.		
Emission test	compliance	Electromagnetic environment - guidance
RF emission – CISPR 11	Group 1	The COBRA uses RF energy only for its internal function. Therefore its emissions are very low and are not likely to cause any interference in nearby electronic equipment
RF emission – CISPR 11	Class B	The COBRA is suitable for use in all establishments including domestic establishments and those directly connected to the public low voltage power supply network that supplies buildings used for domestic purposes
Harmonic emission IEC 61000-3-2	Class A	The COBRA is suitable for use in all establishments including domestic establishments and those directly connected to the public low voltage power supply network that supplies buildings used for domestic purposes
Voltage fluctuation/flicker emission IEC 61000-3-3	Complies	The COBRA is suitable for use in all establishments including domestic establishments and those directly connected to the public low voltage power supply network that supplies buildings used for domestic purposes

6.2 ELECTROMAGNETIC IMMUNITY.

Table 2 -Guidance and manufacturer's declaration – electromagnetic immunity			
The equipment COBRA is intended for use in the electromagnetic environment specified below. The customer or the end user of the COBRA should assure that it is used in such an environment.			
Immunity test	IEC 60601 Test level	Compliance level	Electromagnetic environment - guidance
Electrostatic discharge (ESD) IEC 61000-4-2	±6 KV contact ±8 KV air	±6 KV contact ±8 KV air	Floors should be wood, concrete or ceramic tile. If floors are covered with synthetic material, the relative humidity should be at least 30%
Electrical Fast Transient/Burst IEC 61000-4-4	±2 KV for power supply lines ±1 KV for I/O lines	±2 KV for power supply lines Not applicable	Mains power quality should be that of a typical commercial or hospital environment
Surge IEC 61000-4-5	±1 KV differential mode ±2 KV common mode	±1 KV differential mode ±2 KV common mode	Mains power quality should be that of a typical commercial or hospital environment
Voltage Dips, Short interruptions and voltage variations on power supply input lines IEC 61000-4-11	<5% Ut for 0,5 cycle 40% Ut for 5 cycles 70% Ut for 25 cycles <5% Ut for 5 sec	<5% Ut for 0,5 cycle 40% Ut for 5 cycles 70% Ut for 25 cycles <5% Ut for 5 sec	Mains power quality should be that of a typical commercial or hospital environment. If the user of the COBRA requires continued operation during power mains interruptions, it is recommended that the COBRA be powered from an Uninterruptible Power Supply or Battery
Power frequency (50/60Hz) magnetic field IEC 61000-4-8	3 A/m	3 A/m	Power frequency magnetic fields should be at levels characteristic of a typical location in a typical commercial or hospital environment

Note: Ut is the AC mains voltage prior to application of the test level

Table 3- Guidance and manufacturer's declaration – electromagnetic immunity			
The equipment COBRA is intended for use in the electromagnetic environment specified below. The customer or the end user of the COBRA should assure that it is used in such an environment			
Immunity test	IEC 60601 Test level	Compliance level	Electromagnetic environment - guidance
			Portable and mobile RF communication equipment should be used no closer to any part of the COBRA, including cables, than the recommended separation distance calculated from the equation applicable to the frequency of the transmitter.
Conducted RF IEC 61000-4-6	3Vrms 150KHz to 80MHz	3 V rms	Recommended separation distance. d=1,167*sqrt (P)
Radiated RF IEC 61000-4-3	3V/m 80 MHz to 2,5 GHz	3 V/m	d=1,167*sqrt (P) 80 MHz to 800 MHz d=2,333*sqrt(P) 800 MHz to 2,5 GHz Where P is the maximum output power rating of the transmitter in watts(W) according to the transmitter manufacturer and d is the recommended separation distance in metres (m) Field strengths from fixed RF transmitters, as determined by an electromagnetic site survey, should be less than the compliance level in each frequency range. Interference may occur in the vicinity of equipment marked with the following symbol:
Note 1: at 80 MHz and 800 MHz, the higher frequency range applies Note 2: These guidelines may not apply in all situations. Electromagnetic propagation is affected by absorption and reflection from structures, objects and people.			

B1. INSTALLATION AND COMMISSIONING

The Firewire cable is removable. You can access the connector the cable by removing the cover located on the front of the instrument. The Firewire connector inside the Cobra is IEEE 1394A (6-pin).

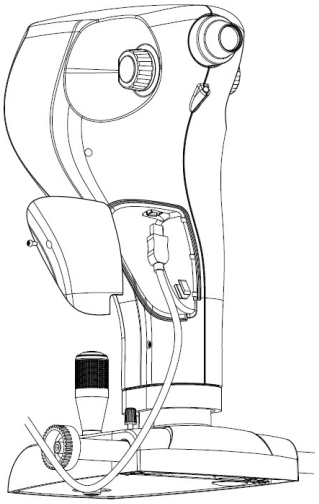

B1.1 INSTALLATION OF COBRA SINGLE COMPUTER WITH FIREWIRE IEEE1394A TYPE (6-PIN) OR IEEE1394B (9-PIN)

In the case where the Cobra is used alone, on computer with a Firewire port type A or B, the instrument connects directly to the PC. Only in the case of a connector Firewire Type B on the PC you have to use an adapter (Firewire A to Firewire B).

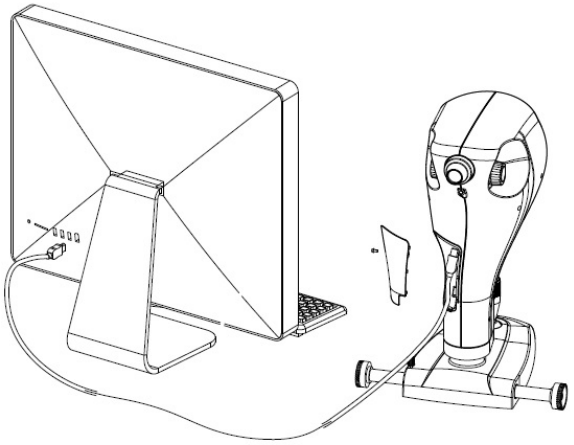

B1.2 INSTALLATION OF COBRA SINGLE IMAC WITH THUNDERBOLT PORT TYPE

In this case you must use the appropriate adapter (code CSO: 3201065 - Apple code: MD464ZM / A). the iMAC computer containing the adapter provided by CSO Thunderbolt adapter.
In addition, the Cobra connected to the Thunderbolt port must be fed. To feed it is necessary to use the appropriate HUB to 9pin (code 3020058) and the 'power 24V, 1.5A code: 302007.
Adapter, hub and power supply must be connected as in the figure on the right.

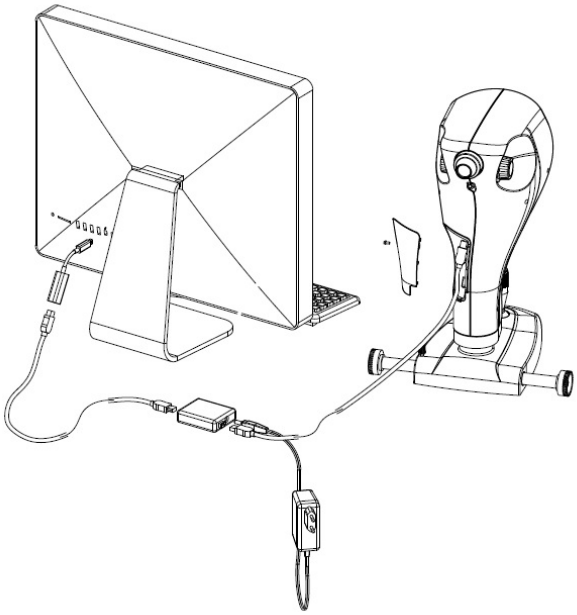

B1.3 INSTALLING THE COBRA ALONG WITH ANOTHER INSTRUMENT
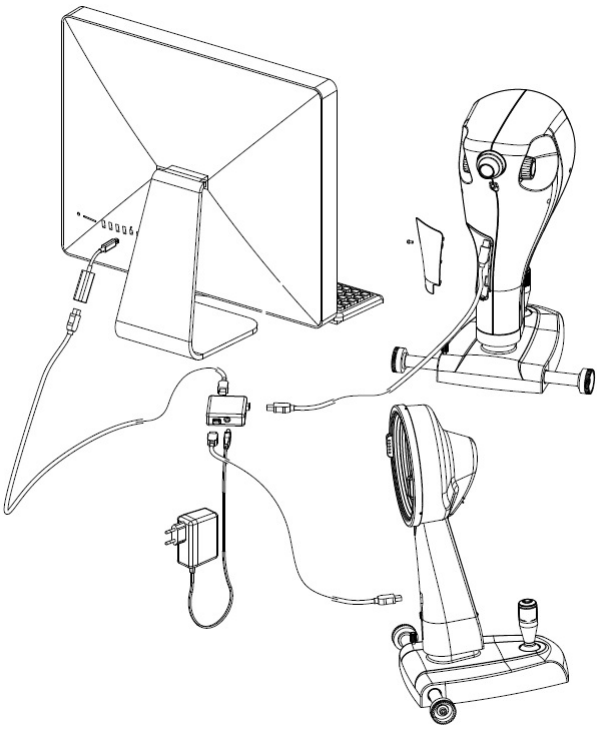
In the case where the Cobra should work together with another device on the same PC, regardless of the type of port on the PC, the two instruments should be connected to a powered FireWire hub.
NOTE: HUB are available 9-pin and 6-pin. The cables firewire are available 9-pin and 6-pin. currently enforcement attention is paid to ensure that the configuration in order to be whole with connectors of the same type.